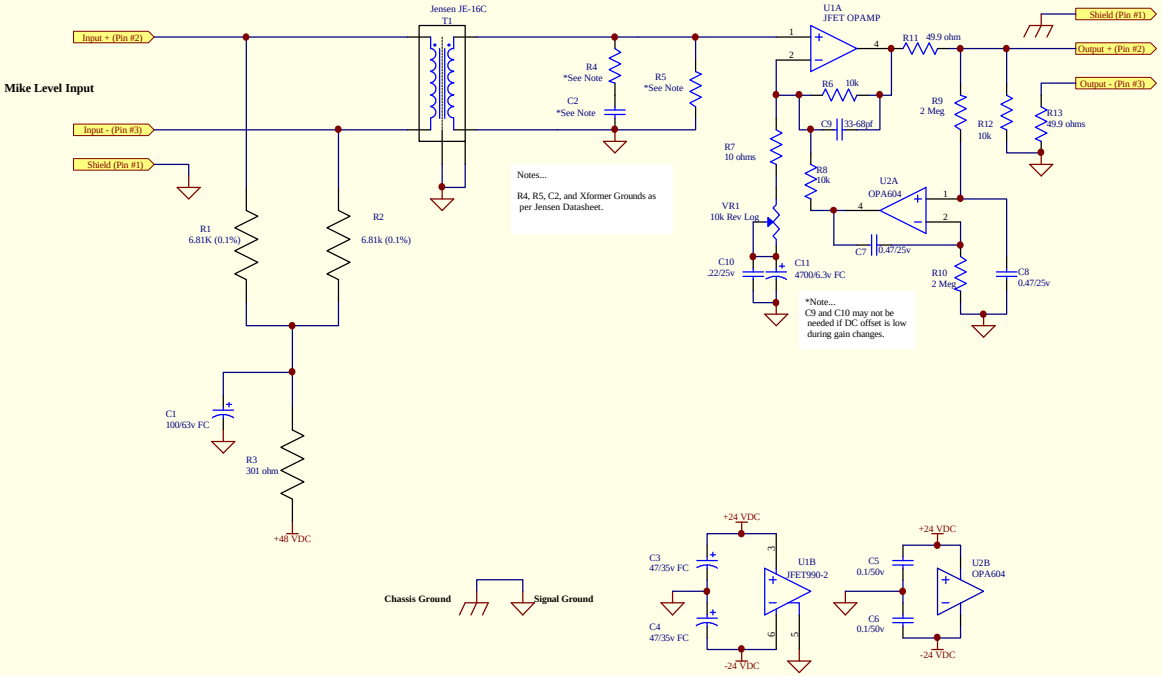

Title	JFET990-2 Mike Preamp using Jensen JE-16 Input Transformer	
Size B	Number	Revision
Date: 25-Sep-2001		Sheet of
File: C:\Website\protel database\website.ddb		Drawn By: