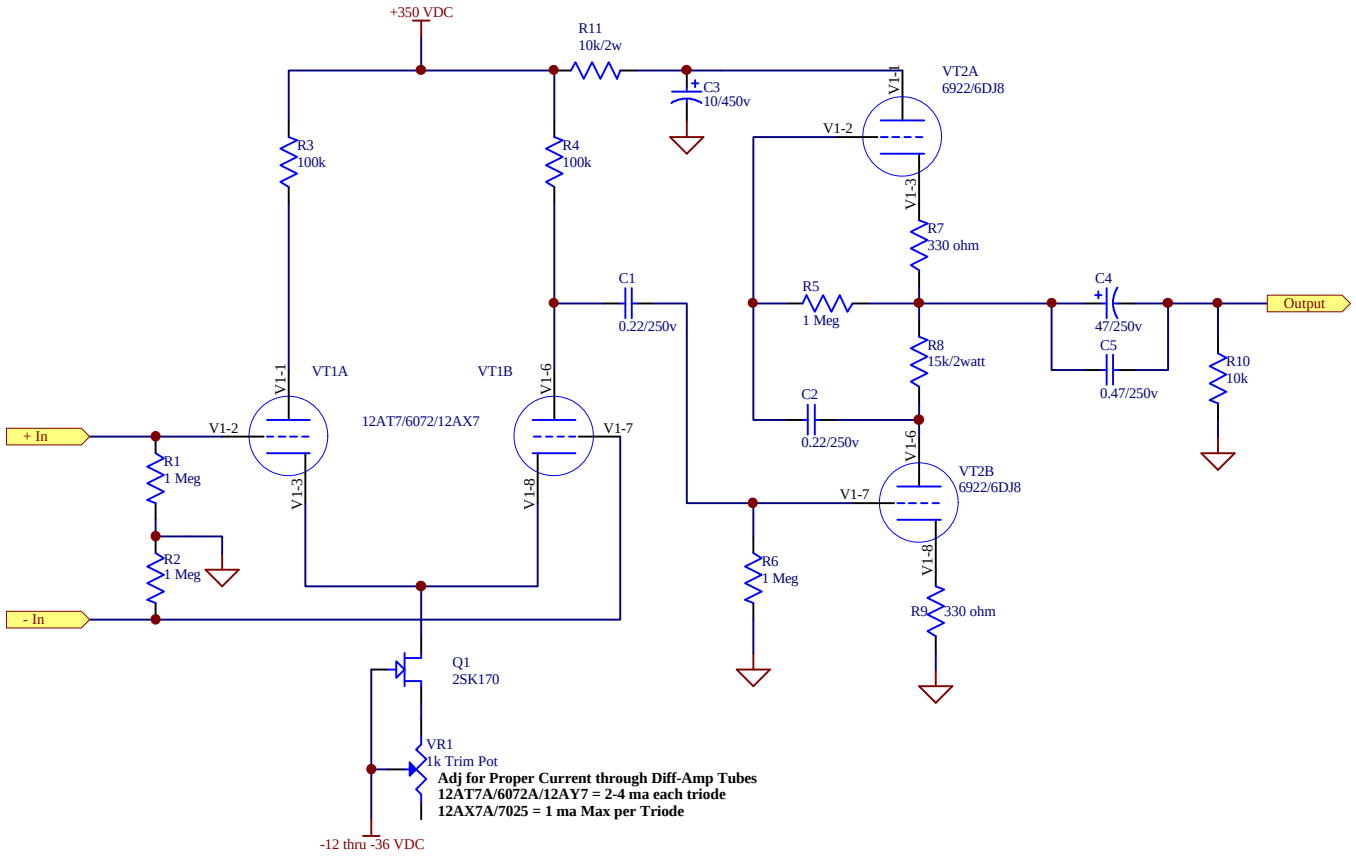

Forssell Technologies Vacuum Tube Opamp Amp