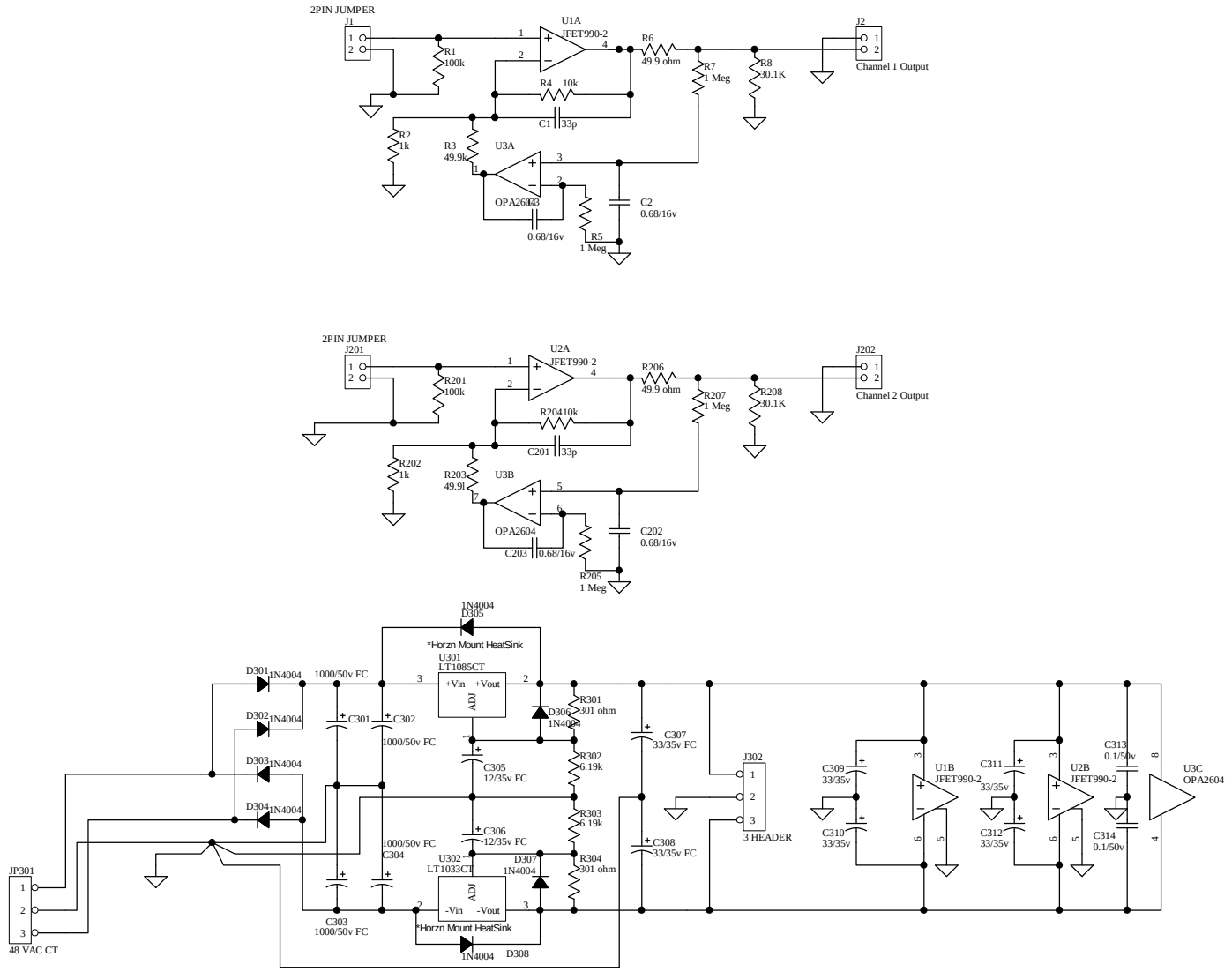

Forssell Technoloiges Dual JFET-992/993 Servo Amp Board