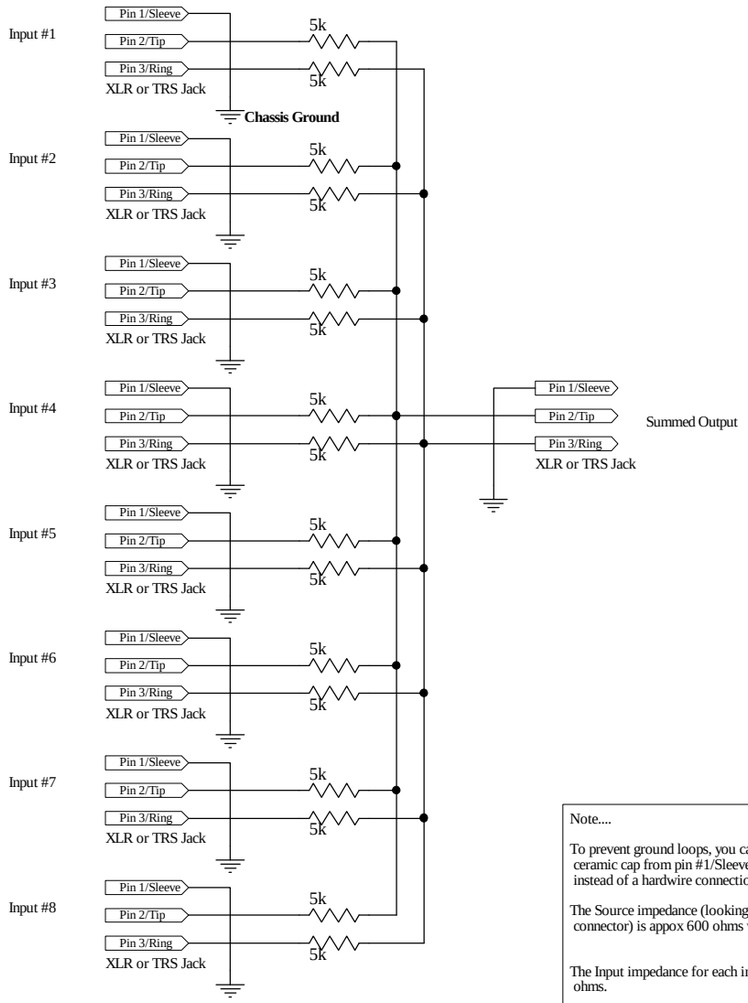

Balanced Input Summing

Note....

To prevent ground loops, you can use a 0.1mfd ceramic cap from pin #1/Sleeve to chassis ground, instead of a hardwire connection.

The Source impedance (looking back into the output connector) is appox 600 ohms with the values shown.

The Input impedance for each input is appox 5.7k ohms.

Load impedance (the input impedance of the device to which the output of the summing buss is attached) should be 10k ohms or higher.

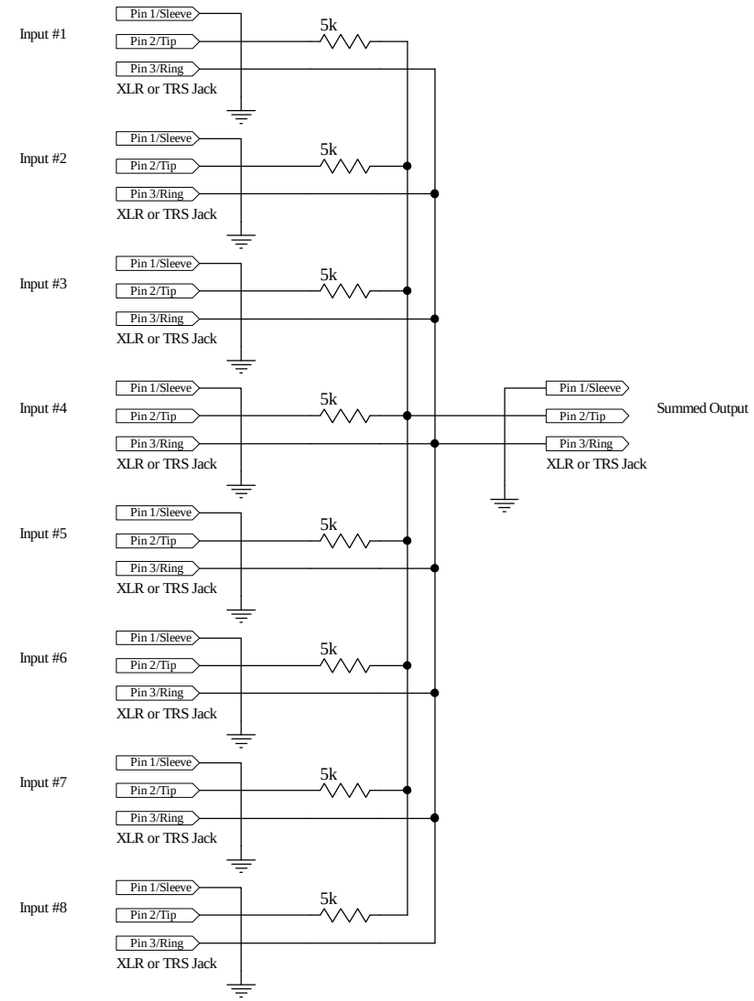

Un-Balanced Input Summing

Title		
8 Channel Passive Summing Busses		
Size B	Number	Revision
Date: 29-Jun-2003	Sheet of	
File: C:\Website\protel database\website.ddb	Drawn By:	